General purpose triaxial accelerometers

993B series



SPECIFICATIONS

	993B-5	993B-6	993B-7
Sensitivity, ±10%, 25°C	25 mV/g	50 mV/g	100 mV/g
Acceleration range	160 g peak	80 g peak	40 g peak
Amplitude nonlinearity	1%		
Frequency response[1]: Z axis, ±3 dB	2 - 10,000 Hz		
X and Y axes, ±3 dB	2 - 7,000 Hz		
Transverse sensitivity, max	7% of axial		
Power requirement:			
Voltage source	18 - 30 VDC		
Current regulating diode	2 - 5 mA		
Electrical noise, equiv. g, nominal:			
Broadband 2.5 Hz to 25 kHz	336 µg	220 µg	160 µg
Spectral 10 Hz	24 µg/√Hz	15 µg/√Hz	10 µg/√Hz
100 Hz	3.2 µg/√Hz	2.0 µg/√Hz	1.4 µg/√Hz
1,000 Hz	2.0 µg/√Hz	1.1 µg/√Hz	1.0 µg/√Hz
Output impedance, max	400 Ω		
Bias output voltage	11 VDC		
Grounding	case isolated, internally shielded		
Turn-on time	<1 sec		
Temperature range	–50° to +120°C		
Vibration limit	500 g peak		
Shock limit	5,000 g peak		
Electromagnetic sensitivity, equiv. g	100 µg/gauss		
Sealing	hermetic		
Base strain sensitivity, max	0.0005 g/µstrain		
Hydrostatic pressure, max	100 psi (IP68)		
Weight (excluding cable)	134 grams		
Case material	316L stainless steel		
Cable	integral, 16 ft. Teflon® J9T4B, armored		
Cable termination[2]	stripped and tinned		
Mounting	10-32 captive screw		

Notes: [1] As measured using the mounting screw.
[2] Optional cable terminations: R11D (11-pin Fischer), R9W (4-pin Bendix), R21 (4-pin Amp), 3xR2 (BNC)

Accessories supplied: 10-32 captive screw; calibration data (level 2)

Key features

- Three-axis measurements
- Manufactured in ISO 9001 facility

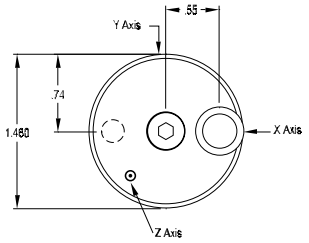

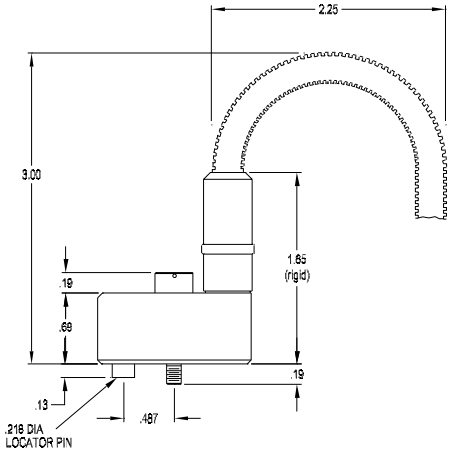

Connections	
Function	Cable conductor color
X axis, power/signal	green
Y axis, power/signal	red
Z axis, power/signal	white
common (all channels)	black
N/C	shield

CE

Note: Due to continuous process improvement, specifications are subject to change without notice.
This document is cleared for public release.

Wilcoxon Sensing Technologies
An Amphenol Company

8435 Progress Drive
Frederick, MD 21701
USA

Tel: +1 (301) 330-8811
Fax: +1 (301) 330-8873

info@wilcoxon.com
www.wilcoxon.com